3 601 H24 000

Stand ~~21-02-18~~
Issue 21-03-05

Fig./Abb. 1

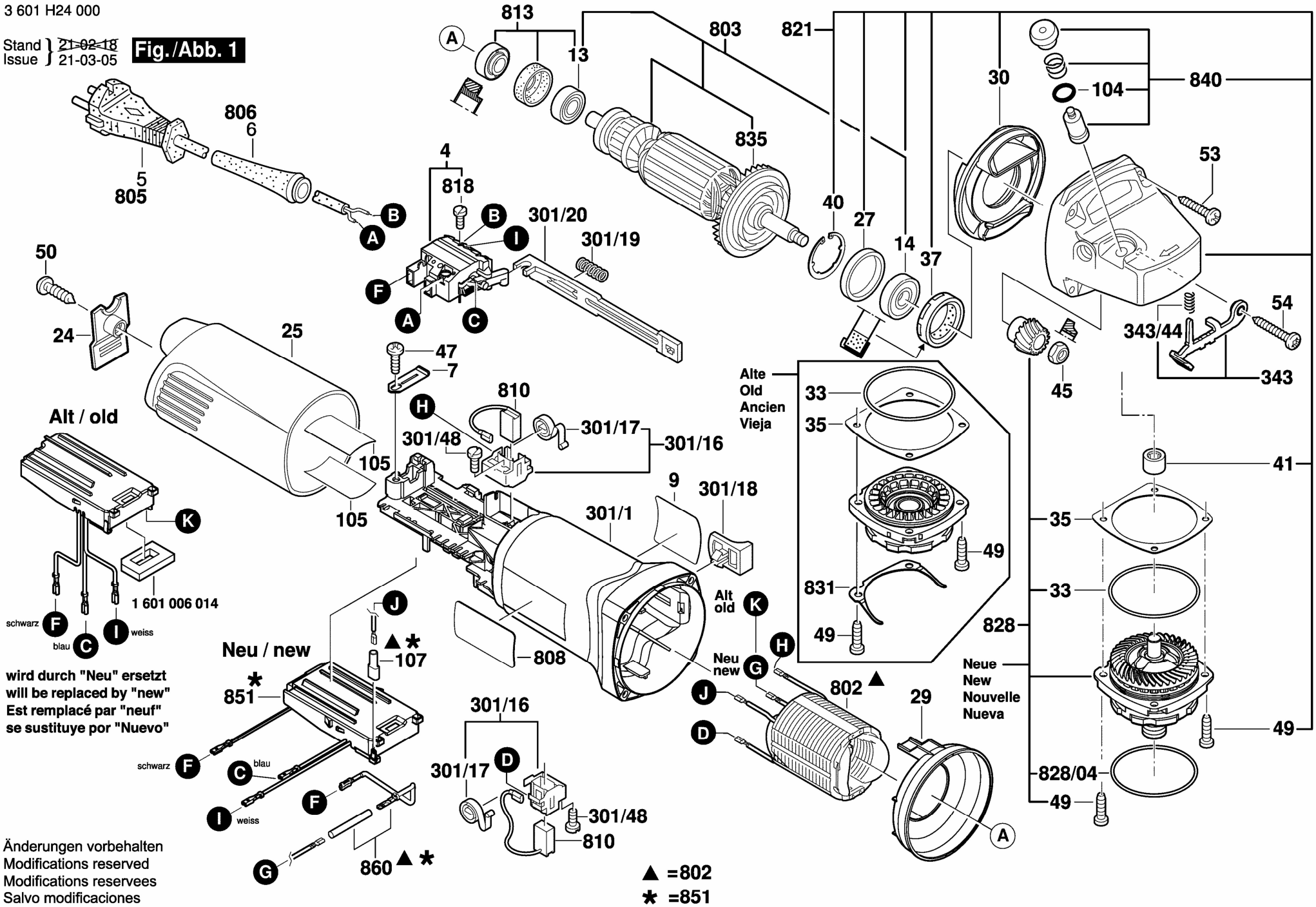

Änderungen vorbehalten
Modifications reserved
Modifications reservees
Salvo modificaciones