0 601 849 903

Stand ~~01-09~~
Issue 02-01-15
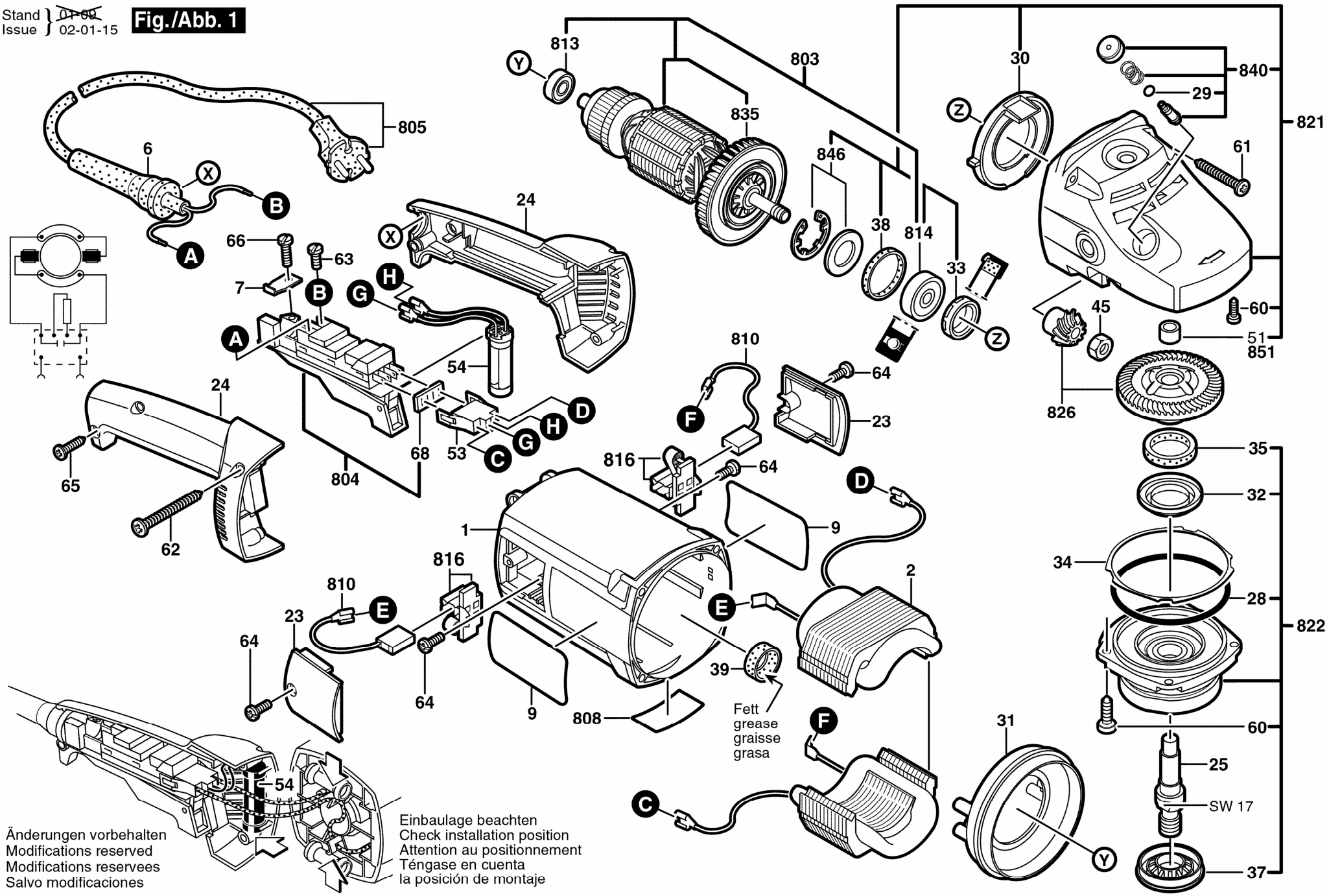
Fig./Abb. 1