0 601 850 903 - 932

Stand ~~01-09~~
Issue 02-01-15
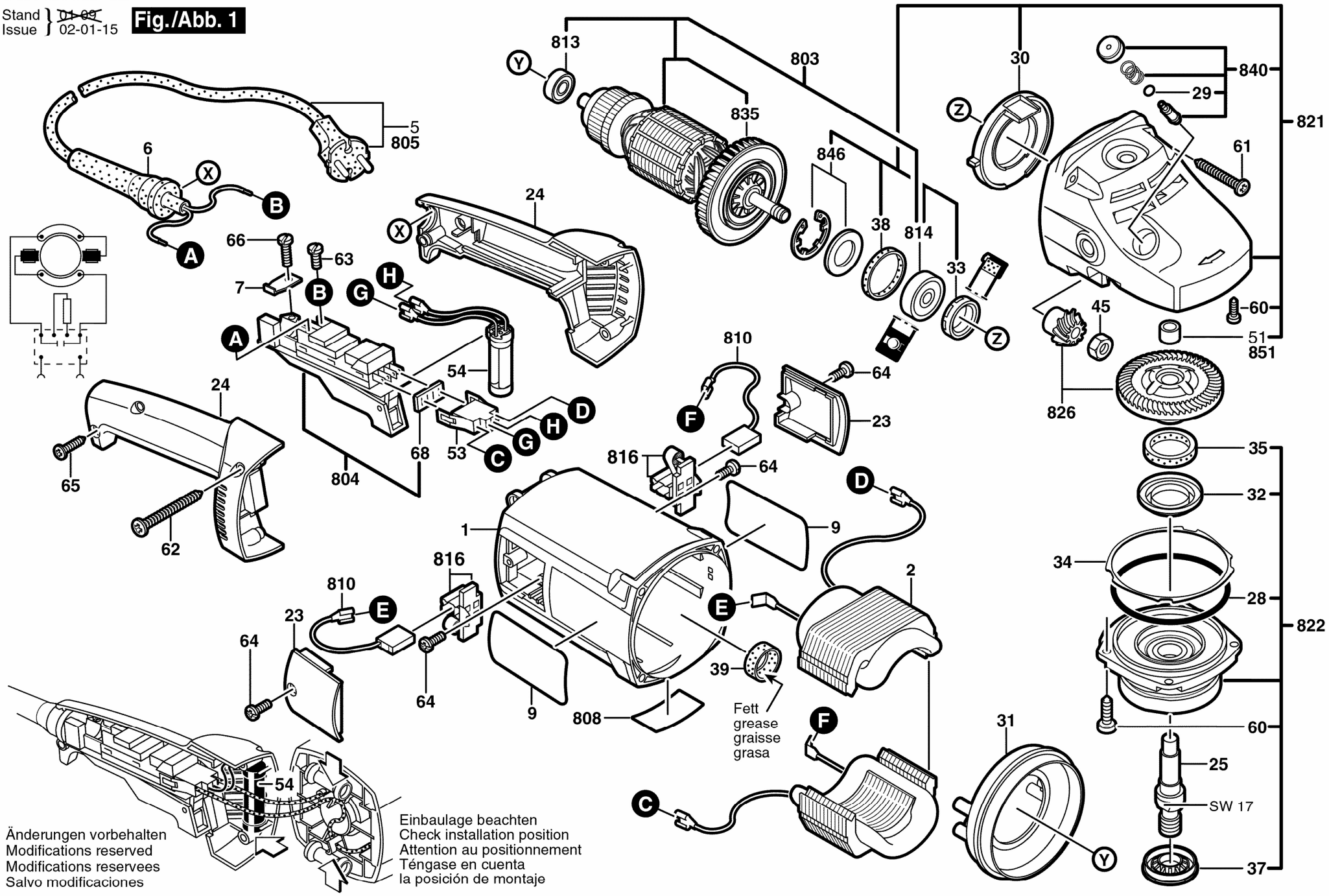
Fig./Abb. 1