0 601 855 903

Stand ~~02-01~~
Issue 08-12-05

Fig./Abb. 1

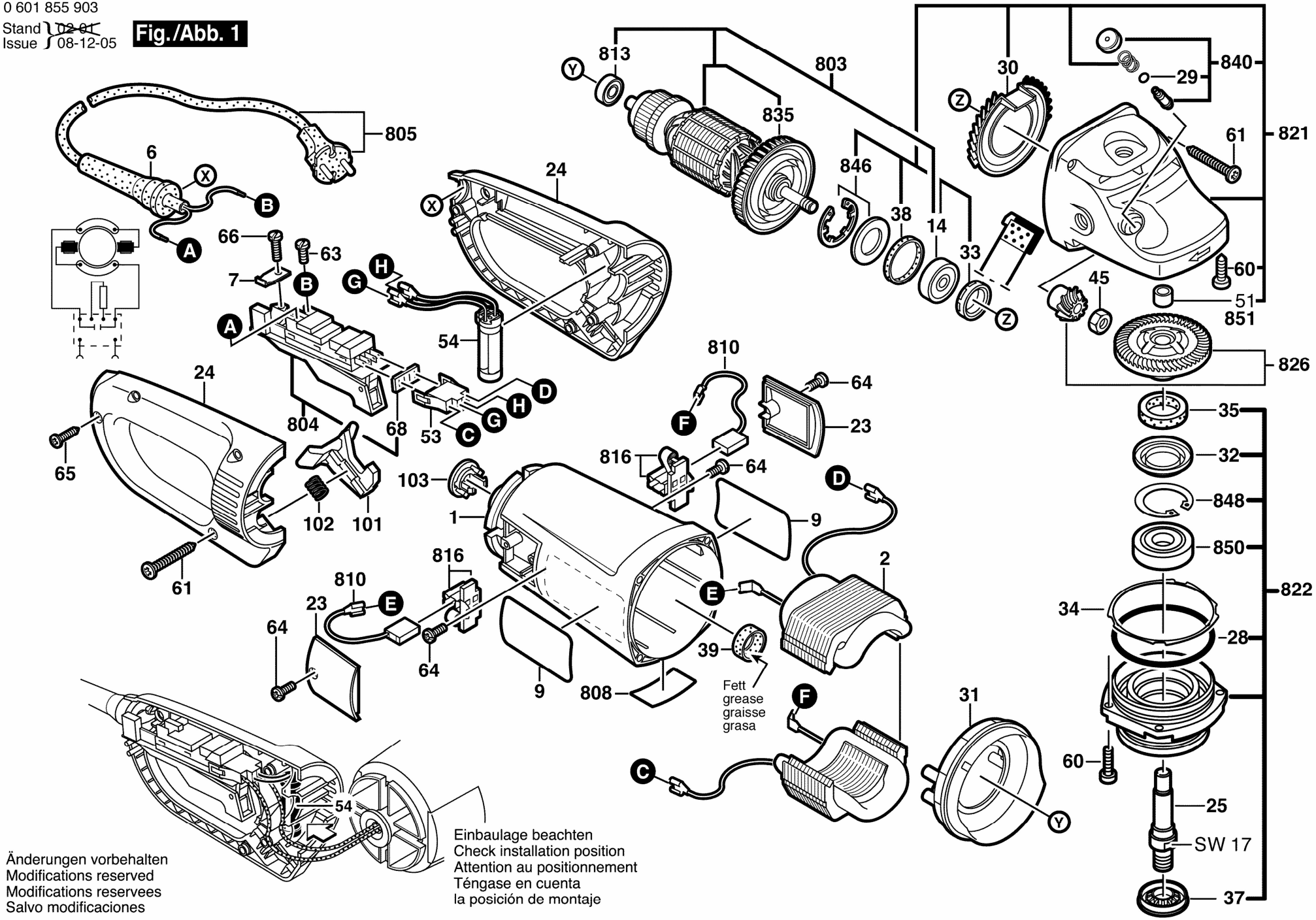

Änderungen vorbehalten
Modifications reserved
Modifications reservees
Salvo modificaciones