0 601 754 903 / 908 / 932

Stand } ~~01.10~~
Issue } 02-02-25
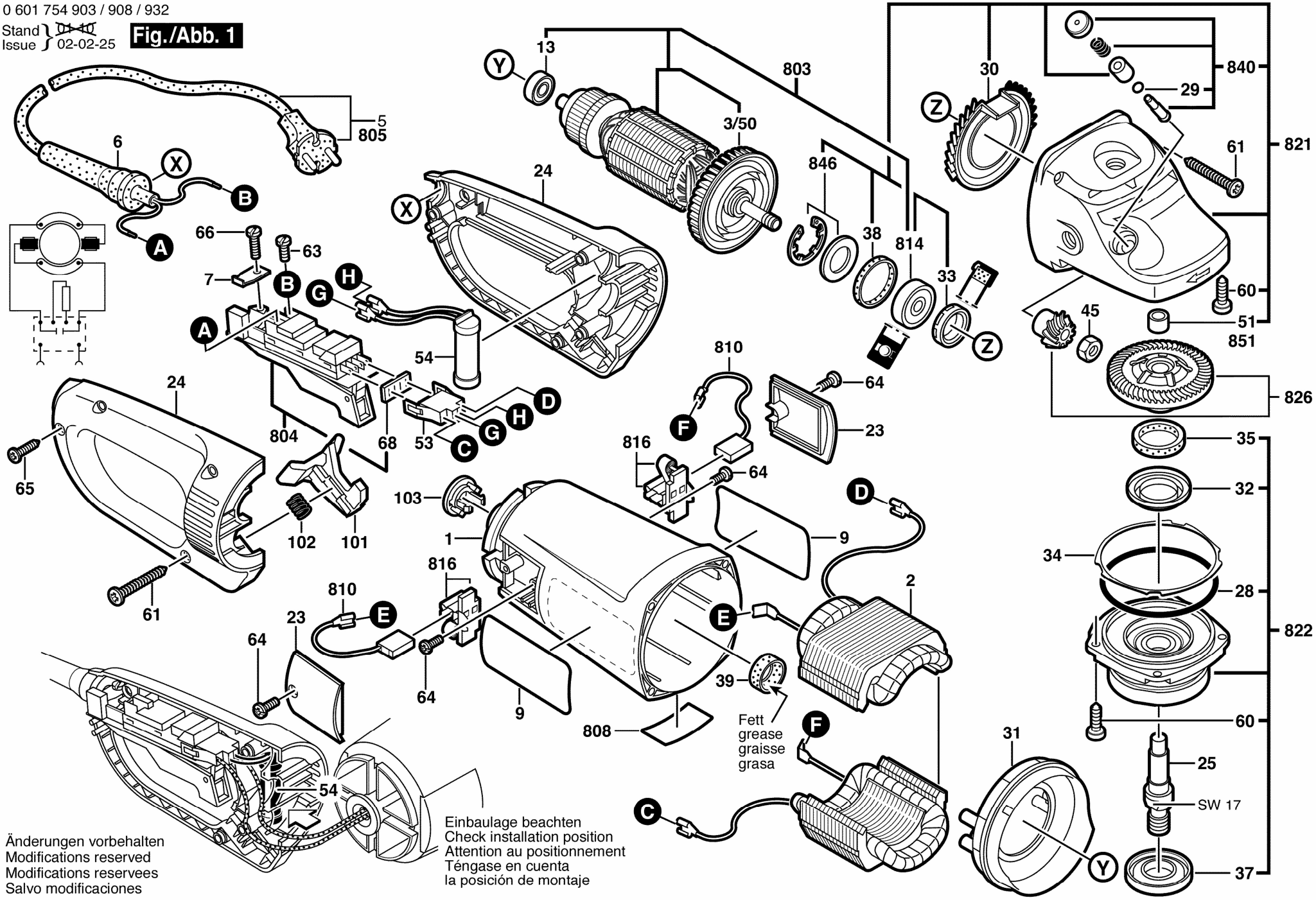
Fig./Abb. 1