3 611 C35 000
Issue / Stand 17-03-03
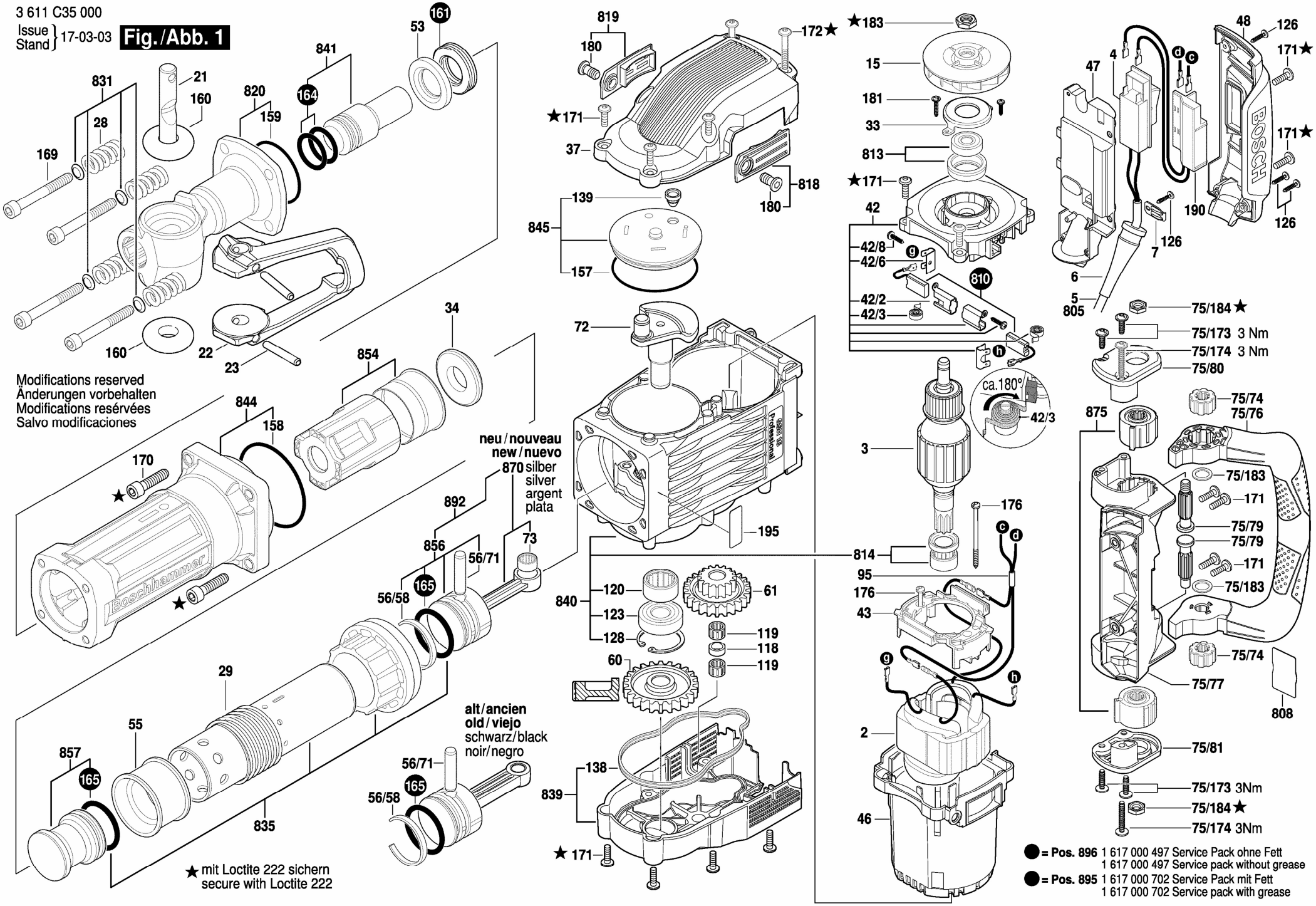
Fig./Abb. 1