GRAPHITE
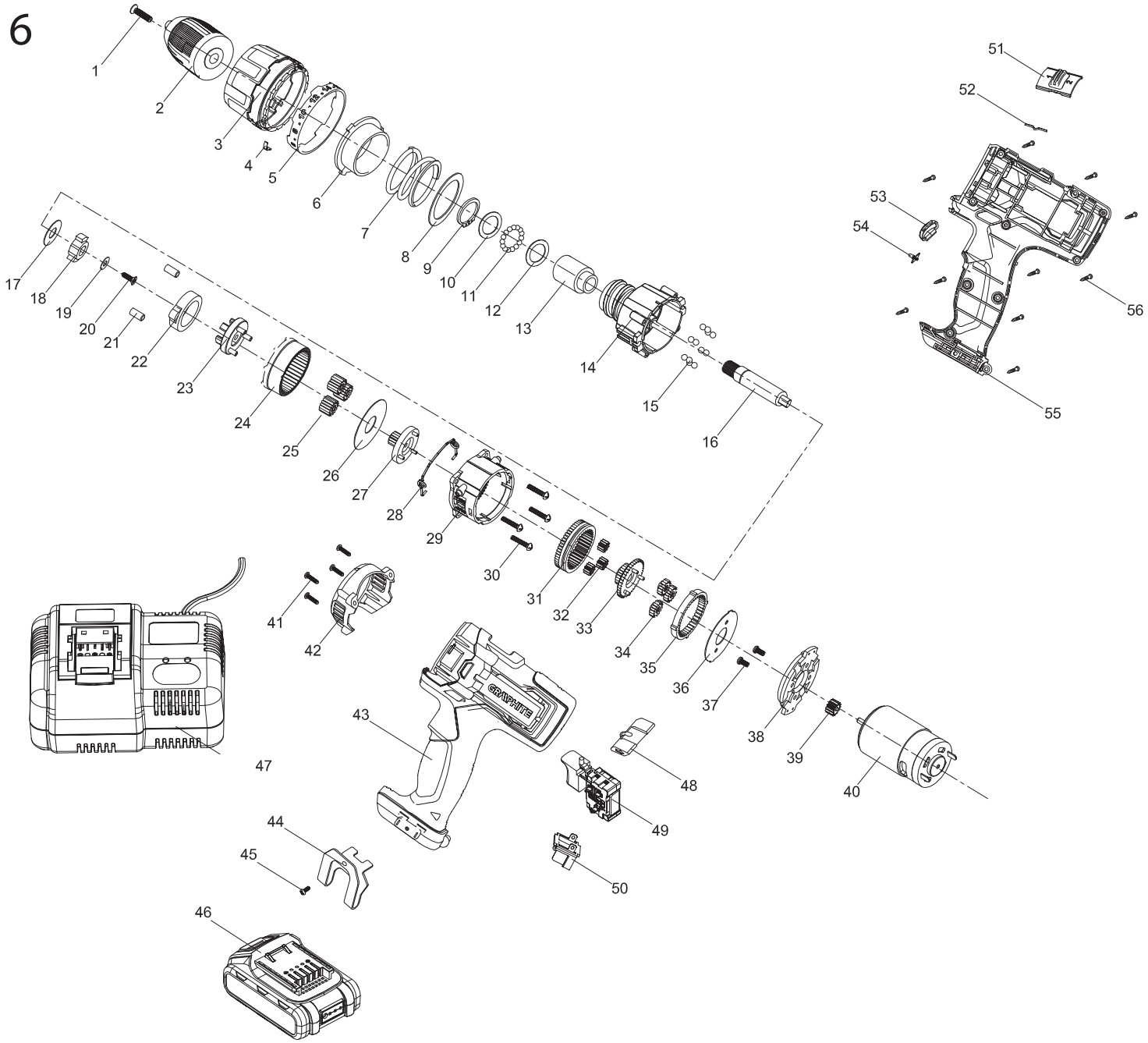
58G216